Datasheet Series SCL

Höcherl & Hackl
The electronic load

Model	SCL601ZV
Order no.	28-004-000-01

Basic operating modes	CC, CV, CR, CP
Standard interfaces	RS-232, USB, LAN, CAN
Max. input voltage Vmax	12V
Min. input voltage Vmin [1]	0 V
Max. load current Imax	400 A
Continuous power [2]	up to 600 W (see footnote 2)
Current-dependent power reduction	1.2 V × set current
Voltage setting	0 ... 12 V
Current setting	0 ... 400 A
Resistance setting	0 ... 0.302 Ohm
Power setting [3]	0 ... 600 W
Rise and fall time fast / medium / slow [4]	2000 µs
Load terminals (rear) [5]	FKS30/10-SM12
Power consumption	650 VA
Noise max. ca. [6]	67 dB(A)
Weight ca.	16 kg
Housing / 3D model [7]	19" - 2 U / SCL_M1
Width x Height x Depth	482 x 111 x 554 mm

1. Minimum input voltage for maximum static load current.
2. For ZV variants, a current-dependent power reduction of (1.2 V × set current) must be calculated.
3. The setting range extends max. to the possible shorttime power.
4. Rise and fall times are defined of 10 % ... 90 % and 90 % ... 10 % of the maximum current (CC mode, fast regulation speed, tolerance ±20 %). Rise and fall time at setting "medium": ca. 150 µs, "slow": ca. 2 ms.
5. FKS30/10-SM12: Flat copper bars 30 x 10 mm vertical with hole for screw M12
   Models with copper bars (FKS) are delivered with safety covers.
6. Measured on the front from distance of 1 m.
7. Device height incl. equipment feet. Maximum width and depth incl. handle. Installation depth without connection cable. 1 U = 44.45 mm.

SCL Series Technical Data

Operating modes, functions		
Basic operating modes	CC, CP, CR, CV	
Combined operating modes	CC+CV, CR+CC+CV, CP+CC+CV, CV+CC	
Functions	DC load MPP Tracking energy storage device test internal resistance measurement list function rectangular function PWM function modulation (sine, triangle, square) data acquisition (internally or to USB flash drive) sweep function save and recall of device settings watchdog in remote operation	
User interface	4.3" TFT touch display	
Accuracy of setting		
	of setting	**of corresponding range**
Voltage	±0.1 %	±0.05 %
Current	±0.2 %	±0.05 %
Resistance (at 5 % to 100 % of voltage range)	±1.4 %	±0.5 % of resistance range ±0.3 % of current range
Power (at V and I > 30 % of range) (at V and I > 5 % and < 30 % of range)	±0.35 % ±0.7 %	±0.1 % ±0.25 %
Resolution	14 bits	
Accuracy of adjustable protections		
	of setting	**of corresponding range**
Overcurrent protection	±1 %	±0.2 %
Undervoltage protection	±0.5 %	±0.2 %
Resolution	12 bits	
Accuracy of measurement slow		
	of measured value (real value)	**of corresponding range**
Voltage	±0.025 %	±0.01 %
Current	±0.2 %	±0.05 %
Resistance	is calculated from current and voltage	
Power	is calculated from current and voltage	
Resolution	23 bits	
Sampling time	250 ms, not triggerable	
Accuracy of display		
Number of decimal places	4	
Accuracy	accuracy of measurement slow ±1 digit of the display value	
Accuracy of measurement fast		
	of measured value (real value)	**of corresponding range**
Voltage	±0.2 %	±0.05 %
Current	±0.2 %	±0.1 %
Resistance	is calculated from current and voltage	
Power	is calculated from current and voltage	
Resolution	16 bits	
Sampling time	200 µs ... 1,000 s, resolution 200 µs	
Accuracy of trigger voltage and current		
Trigger voltage	±1 % of voltage range	
Trigger current	±1 % of current range	
Sampling time	200 µs	

Dynamic function LIST	
Operating modes	CC, CV, CR, CP
No. of load levels	max. 300, with corresponding ramp and dwell times
Accuracy of load levels	see accuracy of setting
Dwell time [1]	200 µs ... 1,000 s
Ramp time [1]	0 ... 1,000 s
Resolution	200 µs
Accuracy of setting times	±0.02 %
Sampling time	see accuracy of measurement fast
Delay at triggered start	max. 300 µs
Dynamic function rectangular	
Operating modes	CC, CV, CR
No. of load levels	2
Accuracy of load levels	see accuracy of setting
Pulse times [1], resolution	1 µs ... 9999.999 ms, resolution 1 µs
Accuracy of setting times	0.02 %
Dynamic function PWM	
Operating modes	CC, CV, CR
No. of load levels	2
Accuracy of load levels	see accuracy of setting
Frequency [1], resol.	0.1 Hz ... 10 kHz, resolution 0.1 Hz
Duty cycle, resol.	1 ... 99 %, resolution 1 %
Dynamic function modulation	
Operating modes	CC, CV
Waveforms	sine, square, triangle
Frequency [1], resol.	0.1 Hz ... 10 kHz, resolution 0.1 Hz
Modulation depth	0 ... 100 %

Data acquisition	
to external USB flash drive	
Sampling time	0.1 ... 30.0 s, resolution 0.1 s
Measurement data	timestamp, voltage, current
No. of measurement points	limited by flash drive memory capacity
File format	.csv
Accuracy	see accuracy of measurement slow
to internal memory	
Sampling time	200 µs ... 1,000 s, resolution 200 µs, synchronized with dynamic function
Measurement data	timestamp, voltage, current
No. of measurement points	max. 40,000
Accuracy	see accuracy of measurement fast
Settings memory	
No. of memory positions	9, selectable (incl. programmed list)
I/O port: inputs and outputs	
Inputs	analog load setting I and V with 0 ... 5 V and 0 ... 10 V analog protection setting I and V with 0 ... 10 V load input activation (low active) operating mode selection CC/CV control speed selection remote shut-down (high active) readable digital input (by SCPI command) trigger input (high active) control input (activates analog signals, low active)
Digital input level	logical low: 0 ... 0.8 V, logical high: 3 ... 30 V

The specified accuracies refer to an ambient temperature of 23 ±5 °C. The specified accuracies are valid when the sense lines are connected and when the unit is connected to undisturbed voltages (ripple and noise < 0.1 %). At voltages with higher disturbance values the accuracy can change for the worse.

1. The applicable time or frequency range is limited by the rise/fall time of the respective model.
2. positive/negative DC voltage or RMS value of a sinusoidal AC voltage
3. only 0 ... 10 V

Technical Data

Outputs	analog voltage monitor output 0 ... 10 V analog current monitor output 0 ... 10 V load input activation state (low active) overload status (OV, OCP, OPP, OTP, low active) programmable logic output (by SCPI command) trigger output (low active)
Digital output level	**Standard**: logical low: 0 ... 0.8 V, logical high: 5 V, max. 10 mA (push-pull) **Isolated**: logical low: 0 ... 0.8 V, logical high: 5 V/24 V selectable, max. 10 mA (push-pull)

I/O port: accuracy of analog control 0 ... 5 V or 0 ... 10 V		
	of setting	of corresponding range
Voltage	±0.1 %	±0.05 %
Current	±0.2 %	±0.1 %
Overcurrent protection [3]	±1 %	±0.2 %
Undervoltage protection [3]	±0.5 %	±0.2 %
	input resistance of analog inputs >10 kΩ	

I/O port: accuracy of analog monitor outputs 0 ... 10 V		
	of analog signal of actual value	offset voltage
Voltage	±0.2 %	±15 mV
Current	±0.2 %	±15 mV
	minimum load > 2 kΩ	

I/O port: permissible voltages		
	standard I/O port	isolated I/O port (option SCL06)
Vin-io (GND - neg. load input)	max. 2 V	max. 185 V [2]
VioPE (GND - PE)	max. 60 V [2]	max. 125 V [2]

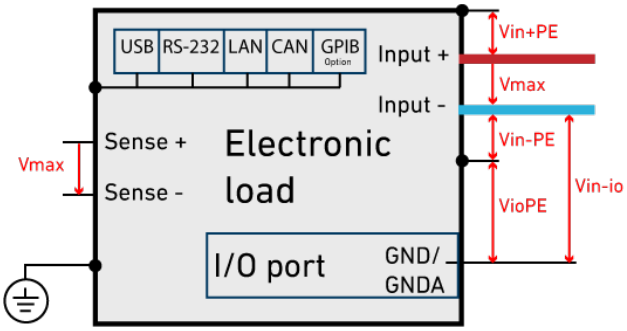

Input	
Input resistance	>50 kΩ when load input is off standard models with diode function at reverse polarity up to nominal current ZV models have no reverse polarity protection!
Input capacity	see model overview
Max. input voltage Vmax	see model overview
Min. input voltage Vmin	see model overview

Input: permissible voltages		
	standard I/O port	isolated I/O port (option SCL06)
Vin-PE (neg. load input - PE)	max. 60 V [2]	max. 60 V [2]
Vin+PE (pos. load input - PE)	max. 60 V [2]	max. 60 V [2]

Power	
Continuous power	see model overview (at Ta = 21 °C)
Derating	-1.2 %/°C for Ta > 21 °C

Protection and monitoring	
Protective devices	overcurrent overpower overtemperature
Monitoring	overvoltage indication reverse polarity indication undervoltage indication (if the input voltage is too low for the set current)

Terminals	
Load input	see model overview
Sense	PH2/7.62-BU16, see starting at page 123

Operating conditions	
Operating temperature	5 ... 40 °C
Stock temperature	-25 ... 65 °C
Max. operating height	2,000 m above sea level
Pollution degree	2
Overvoltage category of mains	II
Max. humidity	80 % at 31 °C, linear decreasing to 50 % at 40 °C
Min. distance rear panel to wall or other objects	70 cm
Cooling	2-stage air cooling
Cabinet installation	with minimum 1 U vented front panel each above and below the device
Noise, weight	see model overview
Mains voltage	see model overview
Mains cable	length max. 3 m cross-section of mains leads min. 1 mm²
Power consumption	see model overview

Housing	
Dimensions	see model overview
Color front rear top	 RAL7035 (light grey) stainless steel RAL7037 (dusty grey)

Safety and EMC	
Protection class	1
Measuring category	O (CAT I according to EN 61010:2004)
Electrical safety	DIN EN 61010-1 DIN EN 61010-2-030
EMC	DIN EN 61326-1 DIN EN 55011 DIN EN 61000-3-2 DIN EN 61000-3-3

Standard interfaces	
Data interfaces	RS-232, USB, LAN, CAN
I/O port	standard (not isolated)

Available options	
Data interface SCL02	GPIB
Hardware extensions SCL06	galvanically isolated I/O port

Calibration, warranty	
FCC-SCLxx	Factory Calibration Certificate, twice for free [4]
Recommended calibration interval	2 years
Warranty	2 years

Technical data of production series A, rev. 2. Subject to technical changes without notice.

The specified accuracies refer to an ambient temperature of 23 ±5 °C. The specified accuracies are valid when the sense lines are connected and when the unit is connected to undisturbed voltages (ripple and noise < 0.1 %). At voltages with higher disturbance values the accuracy can change for the worse.

1. The applicable time or frequency range is limited by the rise/fall time of the respective model.
2. positive/negative DC voltage or RMS value of a sinusoidal AC voltage
3. only 0 ... 10 V
4. The second calibration is free of charge if the particular device has been registered with H&H: www.hoecherl-hackl.com/service/device-registration