Datasheet Series ACL

Höcherl & Hackl
The electronic load

Model	ACLS15428RV	
Order no.	25-035-000-01	

Basic operating modes	CC, CR, CP, CV
Standard interfaces	RS-232, USB, LAN, CAN
Number of phases	1
Frequency	DC, 40 ... 1000 Hz
Maximum AC input voltage VmaxAC	280 V AC
Maximum DC input voltage VmaxDC	400 V DC
Minimum input voltage Vmin [1)]	30 V
Maximum current Imax	110 A
Maximum peak current Ipeak	440 A
Power	15400 W
Resistance	0.27 ... 36 Ω
Rise/fall time [2)]	20 µs
Load terminals [3)]	PH3/15-ST125
Power consumption	650 VA
Mains voltage Mains voltage switchable	1/N/PE AC 230 V 50 ... 60 Hz 1/N/PE AC 115 V 50 ... 60 Hz
Noise max. ca. [4)]	80 dB(A)
Weight ca.	121 kg
Housing / 3D model [5)]	19" - 14 U / ACL_M21
Installation Depth [6)]	
Width x Height x Depth	482 x 729 x 513 mm

1. Minimum input voltage for maximum static load current.
2. Rise and fall times are from 10 ... 90 % and 90 ... 10 % of maximum current (CC mode, tolerance ±20 %).
3. SBUS4-32: Touch-protected sunk binding post for 4 mm banana plugs / max. 32 A.
   PH3/7.62-ST41: Phoenix plug strip 3-pole / Grid dimension 7.62 mm / max. 41 A.
   => incl. mating connector from PHOENIX CONTACT (Phoenix order no.: 1777846)
   PH3/10.16-ST76: Phoenix plug strip 3-pole / Grid dimension 10.16 mm / max. 76 A.
   => incl. mating connector from PHOENIX CONTACT (Phoenix order no.: 1967469)
   PH3/15-ST125: Phoenix plug strip 3-pole / Grid dimension 15 mm / max. 125 A.
   => incl. mating connector from PHOENIX CONTACT (Phoenix order no.: 1762602)
   PH7/10.16-ST76: Phoenix plug strip 7-pole / Grid dimension 10.16 mm / max. 76 A.
   => incl. mating connector from PHOENIX CONTACT (Phoenix order no.: 1967508)
4. Measured at the front in distance of 1 m.
5. 1 U = 44.45 mm. Detailed dimensions by means of 3D models at www.hoecherl-hackl.com/downloads.

Subject to modifications without notice, errors and omissions expected

6. Installation depth without wiring.

ACL Series Technical Data

Operating modes		
Basic operating modes	CC, CV, CR, CP	
Frequency		
Frequency range	DC, 40 ... 1,000 Hz	
Synchronization time	1 ... 5 periods of input signal	
Synchronization time for rapidly changing frequencies or when connecting the input voltage	**Synchronization to input/extern**	**Pre-synchronization to line voltage**
	max. 500 ms	0 ms
Accuracy of voltage setting[1)]		
	of setting	**of corresponding range**
Voltage DC AC	 ±0.5 % ±1 %	 ±0.1 % ±0.2 %
Accuracy of current setting[1)]		
	of setting	**of corresponding range**
Current DC 40 ... 400 Hz > 400 Hz	 ±0.2 % ±0.5 % ±0.75 %	 ±0.15 % ±0.3 % ±0.5 %
Resolution	14 bits	
Total harmonic distortion[2)] 40 ... 400 Hz > 400 Hz	 <2 % <4 %	
Accuracy of resistance setting[1)]		
	of setting	**of corresponding range**
Resistance[3)]	±1.5 %	±1 % of resistance range ±0.3 % of current range
Accuracy of power setting[1)]		
	of setting	**of corresponding range**
Power[4)] DC, 40 ... 400 Hz > 400 Hz	 ±1 % ±1.5 %	 ±0.25 % ±0.3 %
Power[5)] DC, 40 ... 400 Hz > 400 Hz	 ±3 % ±5 %	 ±0.5 % ±2.5 %
Resolution	calculated from resolutions of voltage and current measurement and current setting	
Rise and fall time		
CC mode	see model overview	
CP, CV mode DC AC	 ca. 10 ms ca. 1 s	
Accuracy of adjustable protections		
	of setting	**of current range**
Overcurrent protection	±1 %	±0.2 %
Resolution	12 bits	
Waveforms (Resolution: 360 points in 1° steps)		
Sine	as fundamental waveform	
Arbitrary waveforms	based on sine, triangle or rectangle, editable pointwise	
Harmonics	2nd to 25th Harmonics in variable proportions superimposable to the fundamental wave	
Crest factor	1.4142 ... 4.0 with automatic amplitude correction	
Phase cut	-180 ... 180°	
Phase shift	-180 ... 180° (only in combination with crest factor or phase cut, no capacitive or inductive load)	
Measurement functions		
Numeric display	rms value voltage, rms value current, resistance, active power, apparent power, reactive power, frequency, power factor, crest factor	
Graphical display	last period of current and voltage with 360 points, temporal progression of rms values of voltage, current and/or power of focused channel	
Accuracy of measurements/display		
	of measured (real) value	**of corresponding range**
Voltage DC AC	 ±0.2 % ±0.3 %	 ±0.05 % ±1 digit ±0.1 % ±1 digit
Current DC 40 ... 400 Hz > 400 Hz	 ±0.2 % ±0.5 % ±0.75 %	 ±0.1 % ±1 digit ±0.3 % ±1 digit ±0.5 % ±1 digit
Resolution	16 bits	
Resistance	calculated from voltage and current	
Power	calculated from voltage and current	
Sampling time	200 µs, triggerable	
Frequency	±0.1 % ±0.1 Hz	
Dynamic function (LIST)		
Number of load levels	max. 300, with corresponding ramp and dwell times	
	min.	**max.**
Dwell time	200 µs	1.000 s
Ramp time	0 s	1.000 s
Resolution	200 µs	
Accuracy of setting times	±0.02 %	
Delay at triggered start	max. 300 µs	
Data acquisition		
to external USB flash drive		
Sampling time	0.5 ... 30 s, resolution 100 ms	
Measurement data	timestamp, voltage, current	
Number of measurement points	limited by USB memory capacity	
Dateiformat	.csv	
to internal memory		
Sampling time	200 µs ... 1,000 s, resolution 200 µs, static or synchronized with LIST function	
Measurement data	timestamp, voltage, current	
Number of measurement points	max. 40,000	
Settings memory		
Number of user settings	9, selectable (incl. programmed waveform and List) 1 for last settings at power-off or power fail	
I/O port (option ACL06): control inputs and outputs		
Control inputs	mode selection load input on - off selection of control source (internal, external) input mode (AC, DC) synchronization source (input, line, extern) synchronization input remote shut-down trigger input (low-active)	
Dig. input level	logical low: 0 ... 0.8 V, logical high: 3 ... 30 V	

The specified accuracies refer to an ambient temperature of 23 ±5 °C. The specified accuracies are valid when the sense lines are connected and when the unit is connected to undisturbed voltages (ripple and noise
< 0.1 %). At voltages with higher disturbance values the accuracy can change for the worse.

1. The accuracy applies for the specified frequencies. At higher frequencies the accuracy decreases.
2. Measured at Imax. THD increases at lower currents.
3. At 5 % Vmax < V < 100 % Vmax and 5 % Imax < I < 100 % Imax.
4. At V > 30 % Vmax and I > 30% Imax.
5. At V < 30 % Vmax or I < 30 % Imax.

Technical Data

Control outputs	load input activation state (low-active) status overload trigger output programmable output
Dig. output level	logical low: 0 ... 0.8 V, logical high: 5 V/24 V selectable, max. 10 mA (push-pull)

I/O port (option ACL06): accuracy analog control 0 ... 10 V for current		
	of setting	of corresponding range
Current DC 40 ... 400 Hz > 400 Hz	 ±0.2 % ±0.5 % ±0.75 %	 ±0.1 % ±0.3 % ±0.5 %
	Input resistance of analog inputs >10 kΩ	

I/O port (option ACL06): accuracy analog monitor signals 0 ... 7 V / 0 ... 10 V for voltage and current		
	of analog signal of real value	offset voltage
Voltage DC, 40 ... 400 Hz >400 Hz	 ±0.3 % ±0.5 %	 ±15 mV ±20 mV
Current DC, 40 ... 400 Hz >400 Hz	 ±0.5 % ±0.75 %	 ±30 mV ±50 mV
	Maximum load capacity 2 kΩ. Analog monitor outputs as proportional AC curve or RMS value, selectable	

I/O port (option ACL06): permissible voltages		
	AC mode The external circuit is mains voltage up to 500 V AC with overvoltage category II.	**DC mode** The external circuit is a DC voltage derived from mains voltage with overvoltage category II.
Vin-io (GND - Input LO)	max. 600 V AC	max. 800 V DC
VioPE (GND - PE)	max. 100 V AC	max. 100 V DC

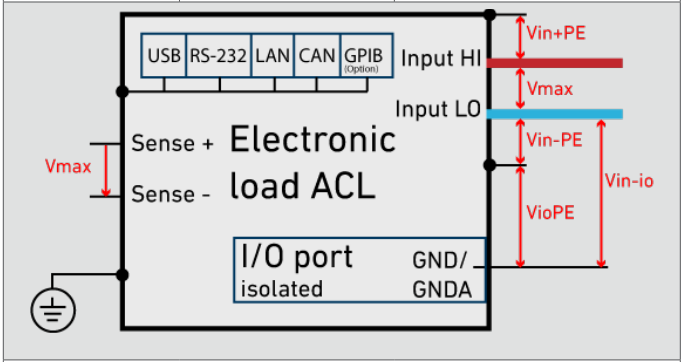

Input	
Input resistance	> 50 kΩ at deactivated load input
Input capacity	see model overview
Parallel operation	up to 3 devices in Master-Slave operation
Max. input voltage Vmax	see model overview
Min. input voltage Vmin for max. current	see model overview
Input: permissible voltages	
Vin-PE (Input LO - PE)	max. 500 V[1)]
Vin+PE (Input HI - PE	max. 500 V[1)]

Power	
Continuous power	see model overview (at TA = 21 °C)
Derating	-1.2 %/°C for TA > 21 °C
Protection and Monitoring	
Protective devices	overcurrent overpower overtemperature
Monitoring	overvoltage undervoltage (if the input voltage is too low for the set current)
Terminals	
Load input	see model overview
Sense	Phoenix PH2/7.62-BU16
Operating conditions	
Operating temperature	5 ... 40 °C
Stock temperature	-25 ... 65 °C
Max. operation height	2,000 m over sea level
Pollution degree	2
Max. humidity	80 % at 31 °C, linear decreasing to 50 % at 40 °C
Min. distance rear panel to wall or other objects	70 cm
Cooling	temperature-controlled air cooling
Noise	see model overview
Mains voltage	see model overview
Mains cable	length max. 3 m cross-section of mains leads: 10 A cold device plug: (IEC C13): min. 1 mm² 16 A cold device plug: (IEC C19): min. 1.5 mm²
Power consumption	see model overview

Housing	
Dimensions, weight	see model overview
Color front panel rear panel side panels, top	 RAL7035 (light grey) stainless steel RAL7037 (dusty grey)
Safety and EMV	
Protection class	1
Measuring category	CAT II
Electrical safety	DIN EN 61010-1 DIN EN 61010-2-030
EMC	DIN EN 61326-1 DIN EN 55011 DIN EN 61000-3-2 DIN EN 61000-3-3
Standard interfaces	
Data interfaces	RS-232, USB, LAN, CAN
I/O port	-
Available options	
Data interface ACL02	 GPIB interface
Hardware extensions ACL06 ACL14	 galvanically isolated I/O port castors
Calibration, warranty	
FCC-ACLxx	Factory Calibration Certificate, twice for free
Warranty	2 years

1. positive/negative DC voltage or RMS value of a sinusoidal AC voltage